Spectra Block Diagram

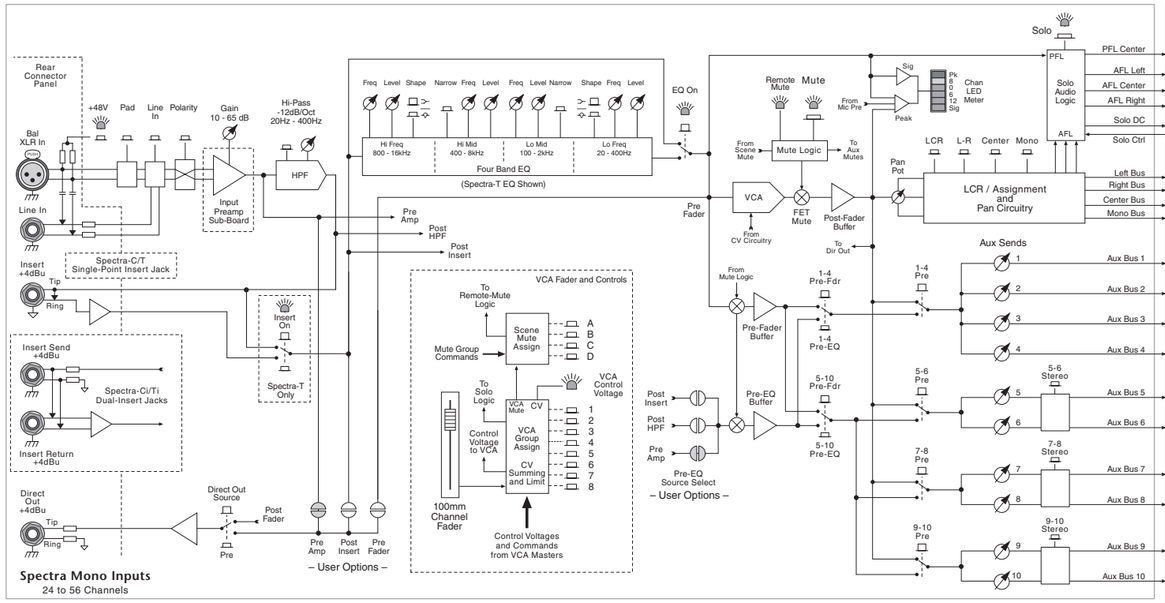

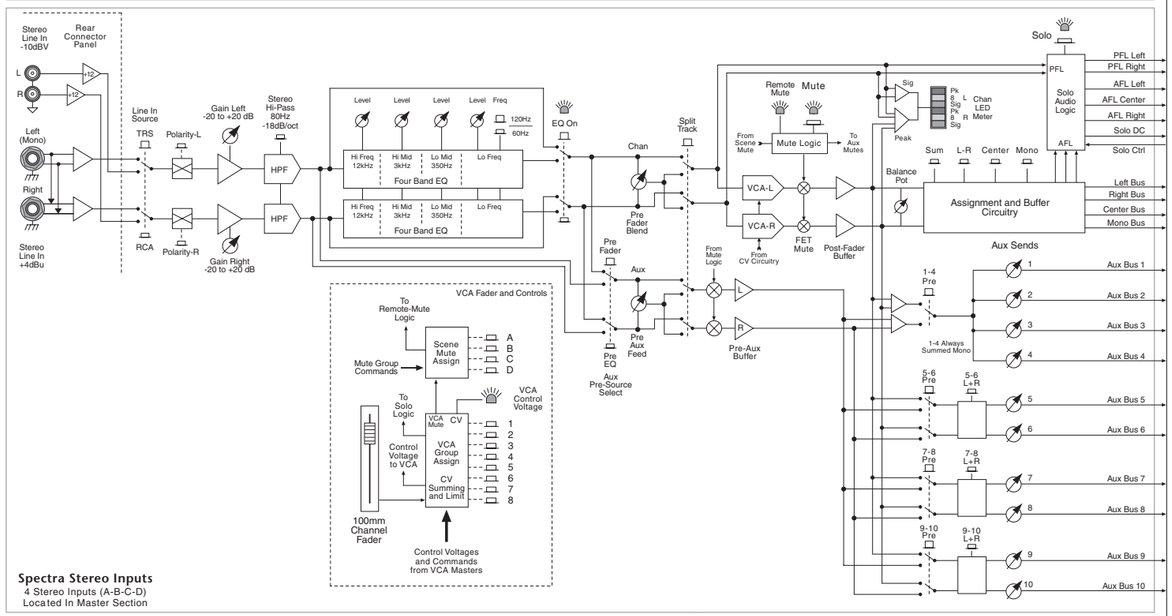

Interconnection Between Modules

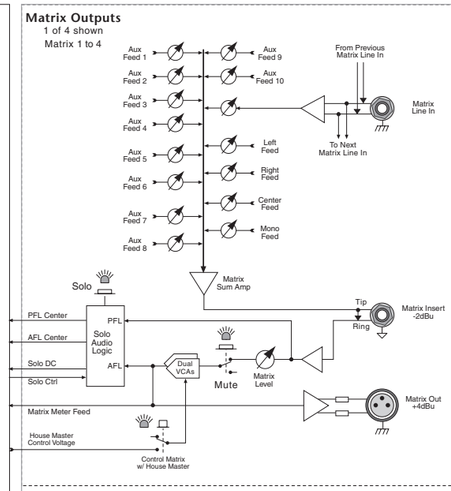

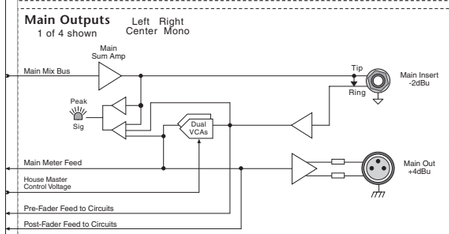

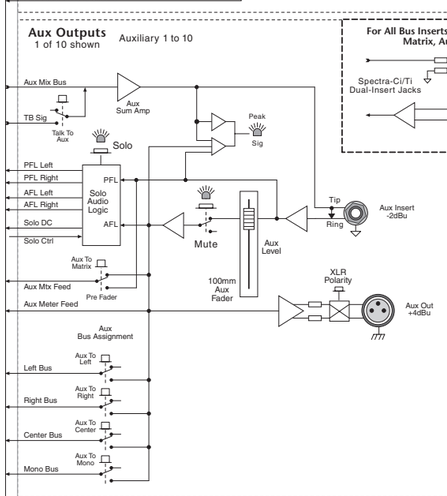

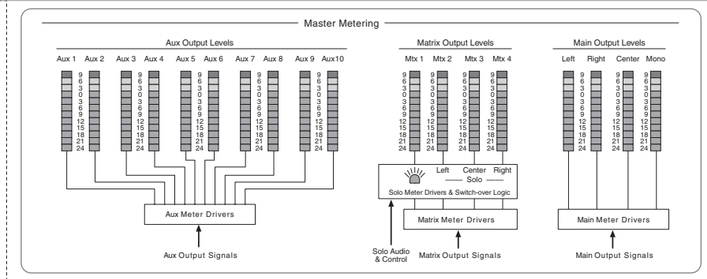

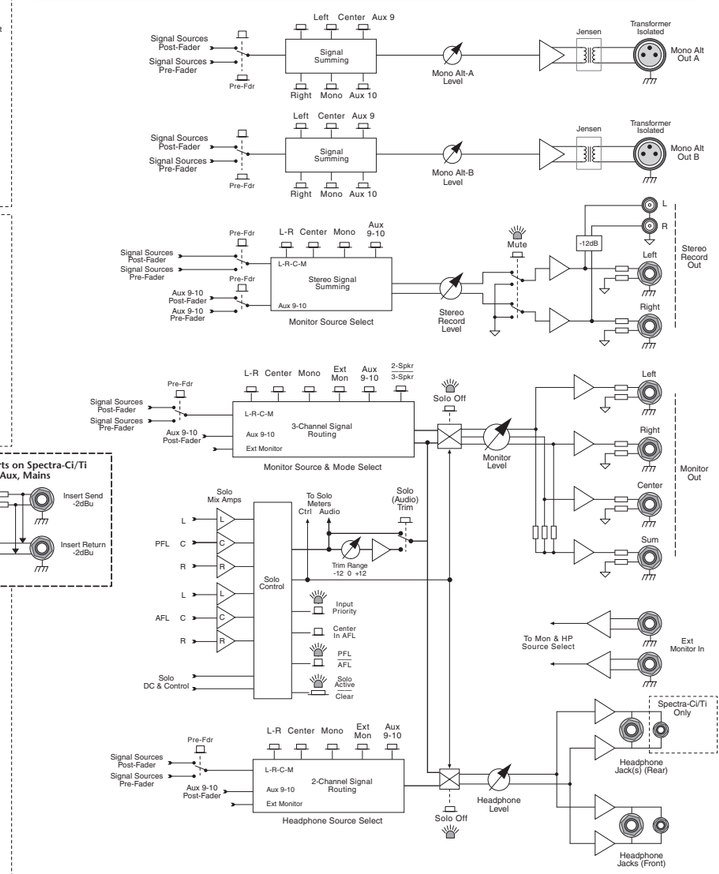

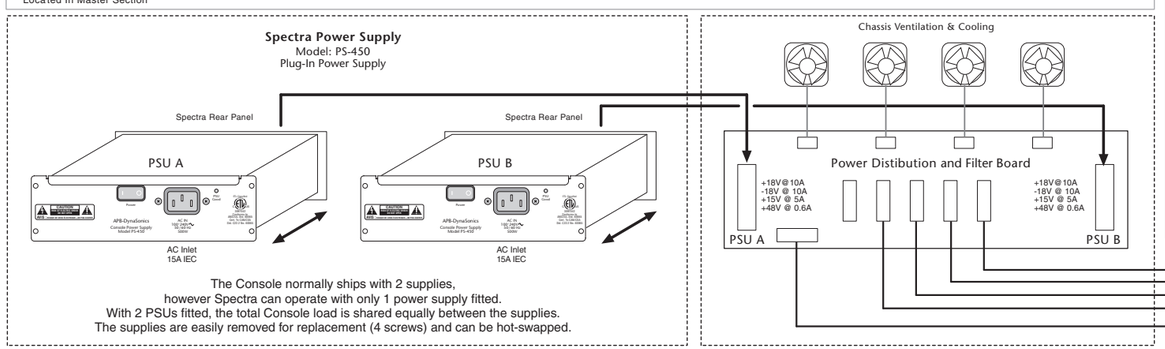

Power Distibution To Modules

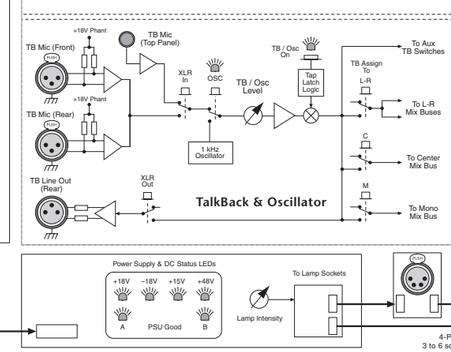

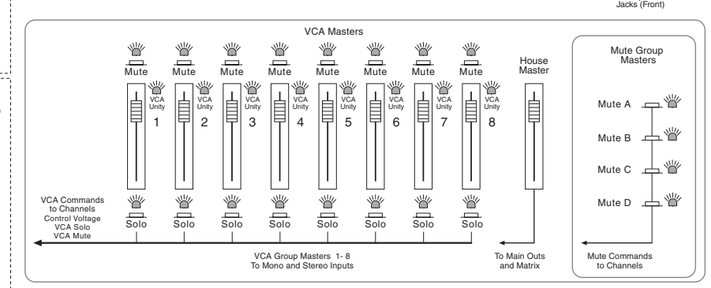

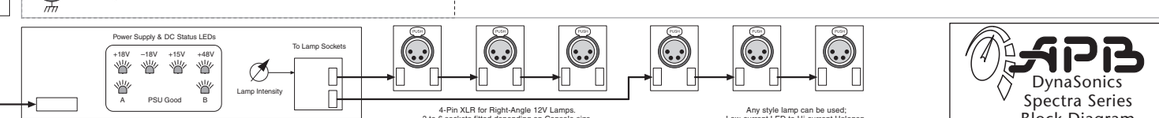

APB DynaSonics Spectra Series Block Diagram